Simulation-Based Evaluation of a Hospital Oxygen Supply System

Normal, Peak and Catastrophic Demand Scenarios

Hospital Size	100 beds (25 ICU, 75 General)
Simulation Platform	Arena Discrete-Event Simulation Version 16.2
Simulation Horizon	24 hours (1,440 minutes)
Scenarios	Normal Hours, Peak Hours, Catastrophic Hours

Prepared report

1. Introduction

This report presents a discrete-event simulation model developed in Arena to evaluate the performance of a hospital oxygen supply system under varying demand conditions. The model represents a 100-bed hospital consisting of 25 ICU beds and 75 general ward beds.

The system is modelled using oxygen demand events rather than patient flow. Each entity represents an oxygen-use request, which arrives over time and consumes oxygen from a finite main supply, with a backup supply available when required. If neither source can satisfy the demand, a shortage is recorded.

The main objective of the model is to assess system performance under three operating conditions - Normal, Peak, and Catastrophic - using key performance measures such as system availability, demand coverage, backup usage, and shortage probability.

2. Model Inputs

2.1 Hospital Configuration and Capacity Control

Parameter	Value
Total Beds	100
ICU Beds	25
General Beds	75

Capacity control is implemented using a conditional hold mechanism, which ensures that the number of simultaneous active oxygen-use requests does not exceed the available number of beds in each ward type.

- ICU requests are limited to a maximum of 25 active requests.
- General ward requests are limited to a maximum of 75 active requests.
- If the number of active requests reaches these limits, additional incoming requests are temporarily held until capacity becomes available.

It is important to note that requests are event-based and are not tied to unique patients. This means that a bed can be reused over time, and a new oxygen-use request may occur after a previous one has been completed. Therefore, the model does not limit the total number of requests over the simulation period, but rather limits the number of concurrent active oxygen users at any point in time.

2.2 Oxygen Supply Parameters

Parameter	Value
Main Oxygen Capacity	150,000 L
Backup Oxygen Capacity	50,000 L

Oxygen demand is first satisfied using the main supply. If the main supply is insufficient, the backup supply is used. If both supplies are insufficient, the request is recorded as unmet demand.

2.3 Oxygen Demand Definition

Each oxygen-use request is defined by two key parameters: oxygen flow rate (L/min) and duration (minutes). The total oxygen required for each request is calculated as follows:

Total Oxygen Demand = Rate x Duration

This formulation allows the model to capture both the intensity and duration of oxygen usage.

The oxygen demand-rate logic was selected to remain broadly consistent with commonly used clinical oxygen delivery ranges while still being practical for scenario-based simulation. Low-flow oxygen therapy such as nasal cannula delivery is commonly used at roughly 1-6 L/min, while simple face masks are commonly used at around 6-10 L/min and non-rebreather masks at around 10-15 L/min (Ernstmeyer and Christman, 2021; O'Driscoll et al., 2017).

Based on this logic, the General ward demand-rate distribution of TRIA(2,3,4) L/min was used to represent lower-flow oxygen support, while the ICU distribution of TRIA(8,10,12) L/min was used to represent more intensive oxygen support. The ICU rate assumption was also kept below the 30 L/min planning figure often used in hospital-level oxygen supply estimation for ICU demand, because this model represents average oxygen-use episodes rather than full design-capacity flow at every ICU outlet (Jha et al., 2022).

The duration component was treated as an operational planning variable rather than a patient-specific prescription. This is important because oxygen-use duration affects concurrent bed occupancy, overlap of active requests and cumulative oxygen consumption. Previous work has shown that the duration of supplemental oxygen requirement is itself useful for hospital oxygen planning and patient turnover estimation (Leulseged et al., 2021).

2.4 Scenario Input Parameters

The demand-side assumptions used for the three scenarios are summarised in Table 2.1.

Scenario	Ward	Interarrival Time	Rate (L/min)	Duration (min)
Normal	ICU	EXPO(60)	TRIA(8,10,12)	TRIA(240,360,480)
Normal	General	EXPO(15)	TRIA(2,3,4)	TRIA(60,120,180)
Peak	ICU	EXPO(45)	TRIA(8,10,12)	TRIA(288,432,576)
Peak	General	EXPO(12)	TRIA(2,3,4)	TRIA(70,140,210)
Catastrophic	ICU	EXPO(30)	TRIA(8,10,12)	TRIA(324,486,648)
Catastrophic	General	EXPO(7)	TRIA(2,3,4)	TRIA(72,144,216)

- Peak conditions are represented by increased frequency of oxygen-use requests and moderately longer durations (+20% ICU, +15% General), while oxygen flow rates remain unchanged.
- Catastrophic conditions are represented by significantly increased arrival rates, longer oxygen-use durations, and a high overlap of active oxygen users.

The scenario escalation was therefore based mainly on changing the arrival frequency and the duration of oxygen-use episodes, while keeping the oxygen flow-rate distributions constant. This allowed the model to test how higher overlap and longer oxygen dependence affect system performance without changing the basic clinical meaning of the selected oxygen flow settings.

3. Modelling Approach

The model follows a demand-driven event structure where oxygen-use requests are generated independently for ICU and general wards. Each request follows the sequence below:

1. A demand event is generated based on the arrival distribution.
2. The request is assigned a flow rate and duration.
3. Total oxygen demand is calculated.
4. The system checks if the main oxygen supply is sufficient.
5. If the main supply is insufficient, the backup supply is evaluated.
6. If both supplies are insufficient, the request is recorded as a shortage.
7. If the request is served, it enters the system and occupies a bed.
8. The request remains active for its assigned duration.
9. After completion, the request exits the system, freeing capacity.

The conditional hold mechanism ensures that requests exceeding bed capacity are delayed until space becomes available, thereby maintaining realistic limits on simultaneous oxygen usage.

4. Simulation Settings

Parameter	Value
Simulation Duration	1,440 minutes (24 hours)
Time Unit	Minutes
Number of Replications	10
Warm-up Period	0

The simulation runs over a 24-hour period to capture daily demand dynamics.

5. Key Assumptions

- Oxygen demand is modelled as independent usage events.
- Requests can occur multiple times over the simulation period.
- Bed capacity limits only simultaneous active requests, not total demand.
- Oxygen consumption is deducted at the start of each request.
- No oxygen replenishment is modelled.
- Oxygen flow rates remain constant across scenarios, while arrivals and durations are adjusted to reflect changing system pressure; this keeps the demand-rate assumptions anchored to the same basic oxygen-delivery logic described earlier.
- The model focuses on volume availability rather than pressure or pipeline dynamics.

6. Simulation Runs and Model Visualisation

To support the interpretation of the numerical results, model snapshots were captured for the three operating conditions. These screenshots illustrate the condition of the main tank, the backup tank, and the overall system status during each scenario.

6.1 Normal Scenario Behaviour

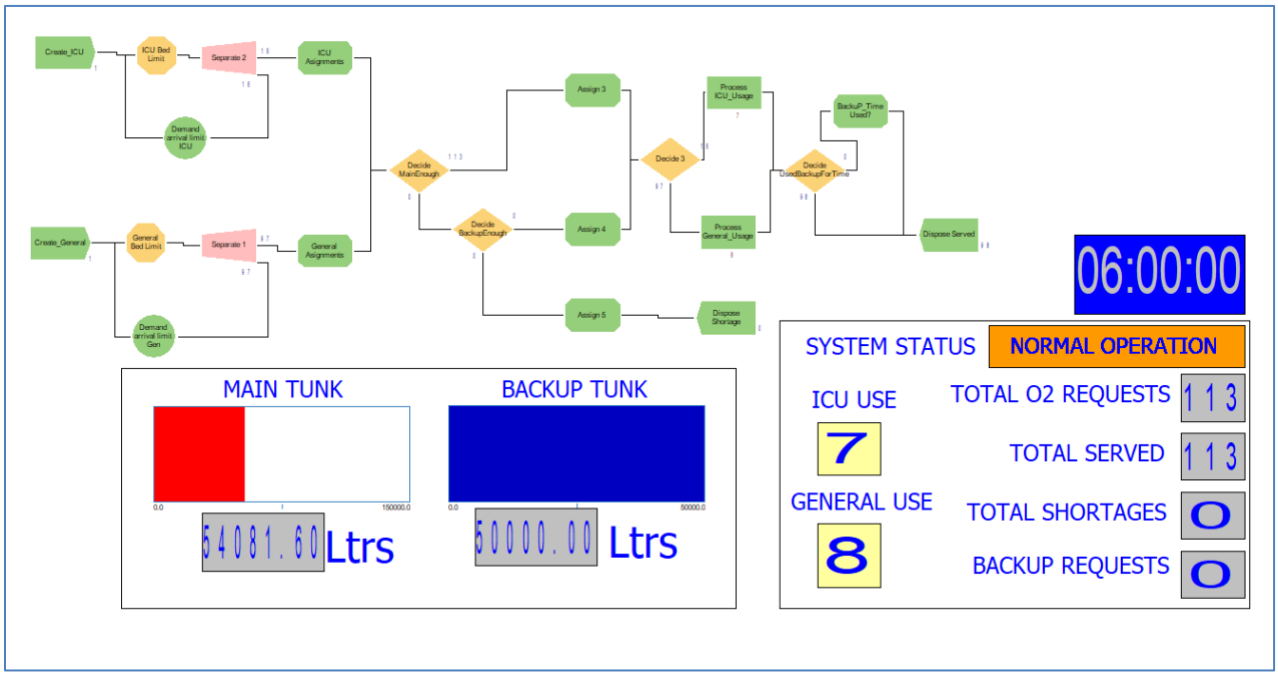

Figure 1: Normal Scenario Behaviour

Under normal conditions, the system operates smoothly with all oxygen demand being satisfied by the main tank. No backup usage is observed, and there is minimal congestion in both ICU and general flows. The system status remains stable, with no shortages recorded.

6.2 Peak Scenario Behaviour

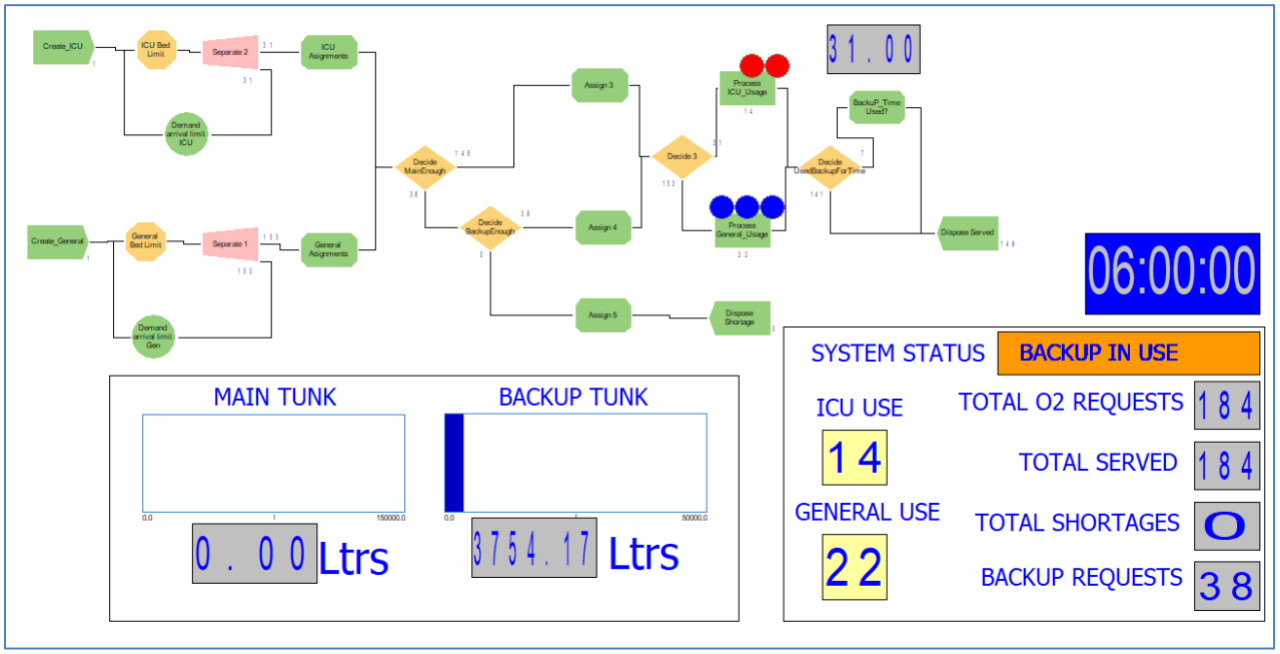

Figure 2: Peak Scenario Behaviour

During peak conditions, the main oxygen tank becomes fully depleted, and the system transitions to using the backup supply. Increased entity flow and higher work-in-progress levels are visible, indicating higher demand pressure. Despite this, all requests are still served, and no shortages occur.

6.3 Catastrophic Scenario Behaviour

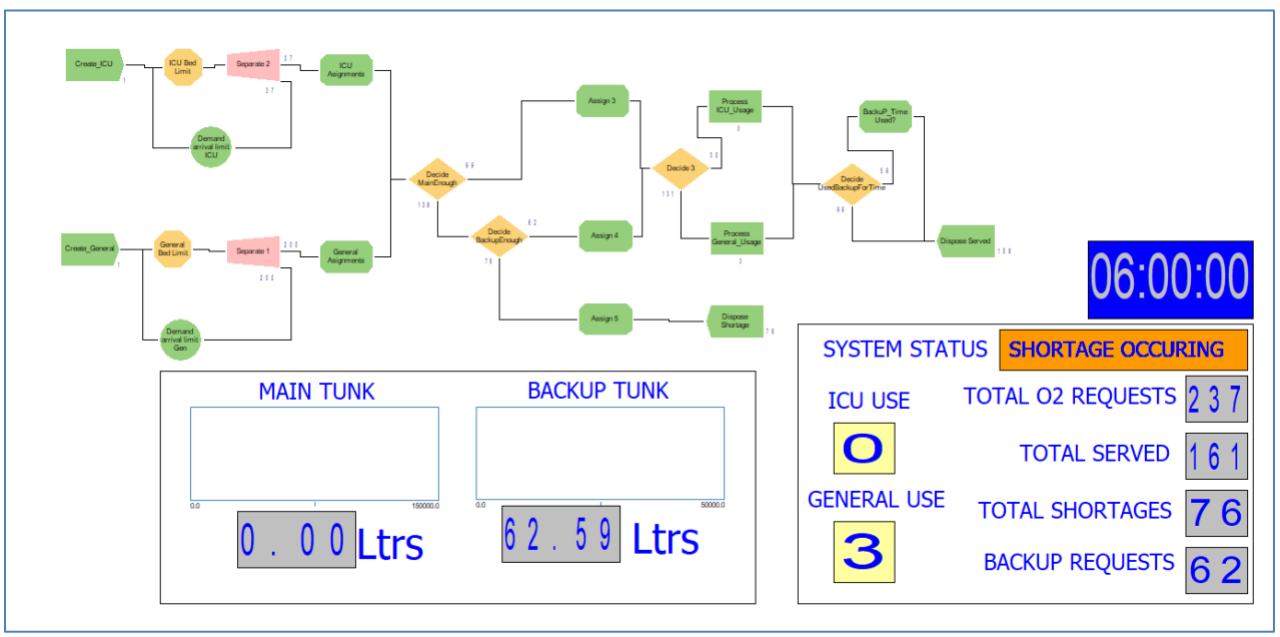

Figure 3: Catastrophic Scenario Behaviour

Under catastrophic conditions, both main and backup tanks are nearly depleted. Significant congestion is observed, and shortages begin to occur. The system status reflects failure conditions, with unmet demand and reduced service capability.

7. Results and Interpretation

Table 7.1 summarises the key performance indicators obtained from the simulation across the three operating conditions.

KPI Category	KPI	Normal Hours	Peak Hours	Catastrophic Hours
Demand / Requests	Total General Requests	97	153	200
Demand / Requests	Total ICU Requests	16	31	37
Demand / Requests	General Demand (WIP)	7.53	15.15	27.24
Demand / Requests	ICU Demand (WIP)	3.07	7.46	12.34
Usage Duration / Process Performance	General Usage Time per Entity (min)	117.03	149.20	283.08
Usage Duration / Process Performance	ICU Usage Time per Entity (min)	362.37	426.53	544.27
Main Supply Performance	Main Tank Utilization (%)	63.95%	100.00%	100.00%
Main Supply Performance	Main O2 Remaining	54,081.60	0.00	0.00
Main Supply Performance	Main-Only Service (%)	100.00%	79.35%	41.77%
Backup Supply Performance	Backup Tank Utilization (%)	0.00%	92.49%	99.87%
Backup Supply Performance	Backup O2 Remaining	50,000.00	3,754.17	62.59

Backup Supply Performance	Backup Supported Demand Time	0.00	832.13	10,163.50
Backup Supply Performance	Backup Supported Requests (%)	0.00%	20.65%	26.16%
System Reliability / Risk	Shortage Probability (%)	0.00%	0.00%	32.07%
System Reliability / Risk	System Availability (%)	100.00%	100.00%	67.93%
System Reliability / Risk	Total Unmet Oxygen Demand	0	0	76

7.1 Interpretation of Results

Normal Hours

Under normal operating conditions, the oxygen supply system performs efficiently and without stress. The model recorded 97 general ward requests and 16 ICU requests, showing that general ward demand contributes the larger number of oxygen-use events, while ICU contributes fewer but more intensive episodes.

The average oxygen-use time per entity was 117.03 minutes for general ward requests and 362.37 minutes for ICU requests. This confirms that ICU requests remain active for much longer than general ward requests, which is consistent with the higher severity and sustained oxygen dependency typically expected in ICU settings.

The main oxygen tank alone was sufficient to meet all demand, with 100% main-only service, 0% shortage probability, and 100% system availability. The main tank still retained 54,081.60 L, while the backup tank remained fully unused at 50,000 L. This indicates that the system is well-capacitated for routine operations.

Peak Hours

During peak conditions, the system experienced a clear increase in demand pressure. Total general requests increased to 153, while ICU requests increased to 31. In addition, average oxygen-use duration also increased, with general usage rising to 149.20 minutes per entity and ICU usage increasing to 426.53 minutes per entity.

This means that the system was not only handling more requests, but those requests were also staying active for longer. As a result, overlap between oxygen users increased, leading to higher work-in-progress levels in both wards.

The main tank was fully depleted in this scenario, and the system began relying on the backup supply. Backup-supported requests reached 20.65%, and backup tank utilization rose to 92.49%. Even with this increased pressure, the system still maintained 100% availability and 0% unmet demand. This shows that

the combined main and backup system was still capable of supporting peak-period demand, although with little reserve margin remaining.

Catastrophic Hours

The catastrophic scenario placed the system under extreme stress. General requests increased further to 200, while ICU requests rose to 37. At the same time, the average oxygen-use time per entity increased sharply to 283.08 minutes for general requests and 544.27 minutes for ICU requests.

These longer process times indicate substantial overlap of oxygen-use events, meaning more oxygen users remained active in the system for longer periods. This directly contributed to higher cumulative oxygen consumption and greater pressure on both tanks.

Under these conditions, both the main and backup tanks were pushed to their limits. Main tank utilization reached 100%, and backup tank utilization reached 99.87%, leaving only 62.59 L in the backup supply. Once both supplies were nearly exhausted, the system could no longer satisfy all demand. This led to a shortage probability of 32.07%, a drop in system availability to 67.93%, and 76 units of unmet oxygen demand. The catastrophic scenario therefore demonstrates the failure point of the existing oxygen supply system under severe sustained stress.

8. Discussion

The simulation results show a clear progression in system stress from Normal to Peak to Catastrophic conditions. As expected, demand pressure increases across the scenarios through two main mechanisms: an increase in the number of oxygen-use requests and an increase in the average duration of oxygen usage.

Under normal conditions, the system operates comfortably within capacity. General requests are more frequent than ICU requests, but ICU requests remain active for much longer, as shown by the average process times of 362.37 minutes for ICU compared to 117.03 minutes for general ward usage. Even with this difference, the main tank alone is sufficient to meet all demand, and the backup system is not required.

In the peak scenario, both request volume and oxygen-use duration increase. General usage time rises to 149.20 minutes, while ICU usage time rises to 426.53 minutes. These longer durations increase the overlap of active oxygen users in the system, which explains the increase in work-in-progress values and the complete depletion of the main tank. However, because the backup system still has enough capacity to absorb the additional load, full system availability is maintained.

The catastrophic scenario highlights the combined effect of high request frequency and prolonged oxygen dependence. The process times rise sharply to 283.08 minutes for general requests and 544.27 minutes for ICU requests, meaning that many requests remain active simultaneously for extended periods. This causes sustained pressure on both tank systems and rapidly reduces available oxygen reserves.

A key finding from the model is that system performance is not driven only by the number of requests. The duration of oxygen usage plays a major role, because longer active times increase concurrency, bed occupancy pressure, and cumulative oxygen consumption. This is why the catastrophic scenario fails even though the increase in request counts alone may not seem extreme. The longer oxygen-use times intensify the burden on the system and accelerate depletion of both the main and backup supplies. This is also consistent with the broader literature showing that the duration of oxygen requirement is an important planning input for oxygen infrastructure, patient turnover and bed demand (Leulseged et al., 2021).

Overall, the results suggest that the current oxygen supply system is adequate for normal operating conditions, resilient enough to manage peak demand through backup support, but not robust enough to withstand catastrophic demand conditions for a prolonged period. This means that while the current design performs well in routine and moderately stressed environments, additional intervention would be required to improve resilience under extreme scenarios.

9. Recommendations

- Increase main oxygen storage capacity so that the system retains a stronger reserve margin during high-demand periods.
- Review backup sizing and redundancy to ensure that the hospital can sustain operations for longer when the main tank is depleted.
- Introduce a refill or replenishment strategy for extended emergencies, since the current model assumes no oxygen replenishment during the 24-hour period.
- Monitor ICU oxygen demand closely because ICU requests consume oxygen for much longer periods and contribute strongly to cumulative system stress.
- Implement an early warning dashboard linked to main and backup tank levels so that management can respond before shortage conditions occur.
- Use the current model as a planning tool to test future capacity upgrades, emergency response rules, and oxygen demand surges.

10. Conclusion

This report presented a simulation-based evaluation of a hospital oxygen supply system under Normal, Peak, and Catastrophic demand conditions. The model showed that the existing system performs well under routine conditions and is still able to maintain full service during peak demand through the support of the backup tank. However, under catastrophic conditions the system reaches its operational limit, resulting in shortages, reduced system availability, and unmet oxygen demand.

The results demonstrate that oxygen system resilience depends not only on the number of incoming requests, but also on the duration and overlap of oxygen-use events. Overall, the model provides a practical basis for evaluating oxygen system adequacy and for guiding future decisions related to storage capacity, emergency planning, and system improvement.

11. References

British Thoracic Society Emergency Oxygen Guideline Development Group, 2017. British Thoracic Society guideline for oxygen use in adults in healthcare and emergency settings. Thorax, 72(Suppl 1), pp.ii1-ii90.

Ernstmeyer, K. and Christman, E., 2021. Nursing Skills. 2nd ed. Treasure Island, FL: StatPearls Publishing. Available at: National Center for Biotechnology Information Bookshelf.

Jha, M., Kumar, M., Acharya, R. and Abraham, P., 2022. Life cycle of medical oxygen from production to consumption. Journal of Family Medicine and Primary Care, 11(2), pp.547-552.

Leulseged, T.W., Hassen, I.S., Ayele, B.T., Tsegay, Y.G., Abebe, D.S., Edo, M.G., Maru, E.H., Zewde, W.C., Neme, D., Taferu, T.A. and Chane, S.A., 2021. Duration of supplemental oxygen requirement and predictors in severe COVID-19 patients in Ethiopia: a survival analysis. Advances in Public Health, 2021, Article 6654187.

World Health Organization and United Nations Children's Fund (UNICEF), 2019. WHO-UNICEF technical specifications and guidance for oxygen therapy devices. Geneva: World Health Organization.

World Health Organization, 2020. Standard treatment protocol of emergency health service package. Geneva: World Health Organization.